1" VersaLux LED Pendant

Series PUX1

Indirect Aircraft Cable Mount Pendant with External Driver

Installation Instructions



OVERVIEW: Installation instructions are intended for multi section pendants suspended via aircraft cable.

NOTE: Refer to electrical design for proper power and control circuiting.

Preparation

Install 4" junction boxes approved for fixture suspension at designated locations. Power and dimming feeds should terminate at the remote driver location. See approved submittal drawing for locations.

WARNING:

- Some disassembly is required for fixture installation. Only disassemble components as directed.
- Do not disassemble the lighting modules. There are no user serviceable parts inside.
- Power and dimming wiring must be installed according to local electrical codes.
- Junction boxes must be positioned at the designated mounting points and firmly affixed to building structure to support fixture weight.
- Remote driver enclosure must be firmly affixed to structure to prevent movement.

Unpacking

Unpack fixtures from crates or boxes. Locate section labels for assembly order. Sections are cut and wired for installation in defined positions. Lighting modules are shipped installed in fixture sections.
Note: It is not necessary to disconnect lighting modules from their sections. If lighting modules are disconnected, reinstall them in their original sections only.

Position fixture sections under their designated junction boxes, ensuring the power feed section end is under the junction box where the low voltage wiring will route to the remote driver box.

Identify the section with two suspension cables; only one section in each run will have two suspension cables (Fig. 1). Install this section first.

(Refer to Fig. 2)
Open the plastic bag on each aircraft cable and remove Cross Bar (A).

Unravel aircraft cable and SJ Cord (B) and low voltage cable if this is a power feed section. DO NOT disconnect from fixture. Unscrew the Canopy Cover Nut (C) from the Canopy Coupler (D) at each cable. Leave the Inside Adjusting Nut (E) in place on the Canopy Coupler. Canopy Cover (F) and Canopy Cover Nut will slide down cable.

Figure 1

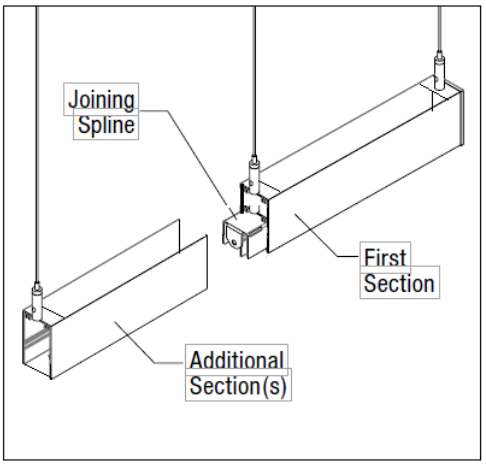

Figure 2

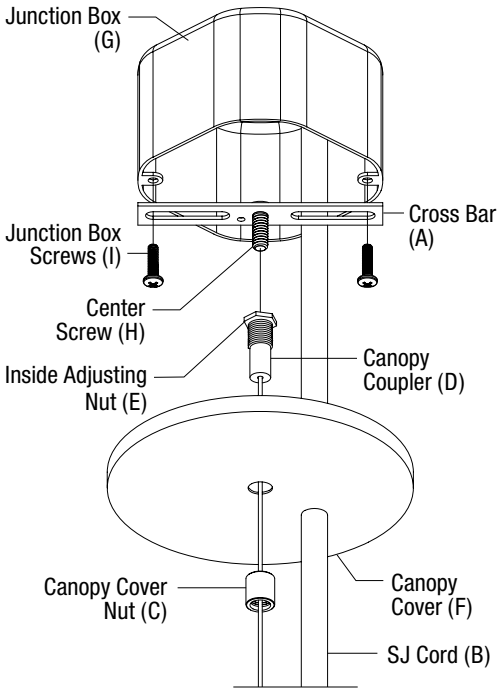

Mounting (Refer to Fig. 2)

Attach Cross Bars to the Junction Boxes (G) with ¼ x 20 Center Screw (H) facing downward (Junction Box and Screws (I) by others).

Raise the first section of the fixture to the Junction Boxes and attach loose ends of Aircraft Cable to Cross Bars by threading the Canopy Couplers onto ¼ x 20 Center Screw. Tighten firmly.

(Refer to Fig. 3 & 4)
Adjust fixture section to desired height by inserting or extending Aircraft Cable (J) at fixture top. To insert cable; hold fixture weight and push cable into Gripper (K). To extend cable, hold fixture weight, press down on the Release (L) on top of Gripper and draw cable out, then release Gripper. Identify the next section per the layout drawing and section markings. Before installing this section, remove the Jack Screw (M) from the Receiving Bracket (N) inside the housing (DO NOT DISCARD; it is used to draw the sections together). Removal and installation is best done with a 5/32 ball head Allen driver. One is supplied with each installation.

Repeat the procedure to install the Cross Bar in its Junction Box and attach the Aircraft Cable, suspending this section from one end.

Next, raise other end and align with the mating end of the prior section. Be sure bus connectors are out of the way, and carefully slide the ends of the joining splines into the corresponding channels of the adjoining section.

From Below (Refer to Fig. 5)

Extract the Lighting Module (O) from the first section by pulling it up from the Housing (P). It will release from the Retention Clips (Q) and hang on the safety chains.

(Refer to Fig. 6)
Reinstall the Jack Screw (M) through the Joining Spline (R) and screw into the Receiving Bracket. Tighten the Jack Screw until there is only a hairline seem between sections.

Adjust the aircraft cable as described so entire fixture is level and forms a straight surface.

Reinstall the lighting module by pressing it into the section housing. When the lighting module is fully engaged, it will click into place and will be flush to the housing. If it does not click into place, extract it, making sure the safety chains are not between the lighting module and the mounting clips and adjoining section is level and straight.

Repeat the process for any remaining sections.

At the power feed section, feed the low voltage cable through a KO in the Junction Box and route to the remote driver box. Raise SJ Cord(s) (Fig. 2 – B) to powered Junction Box (slide the Canopy Cover down the cable to provide easier access, if needed).

Remove and reattach the strain relief clamps, if necessary.

Figure 3

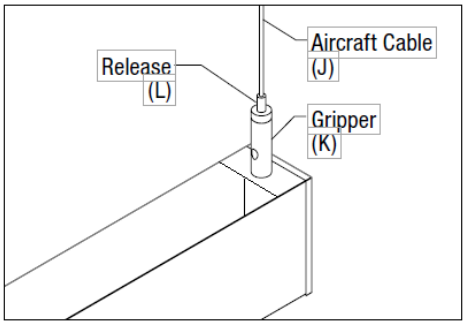

Figure 4

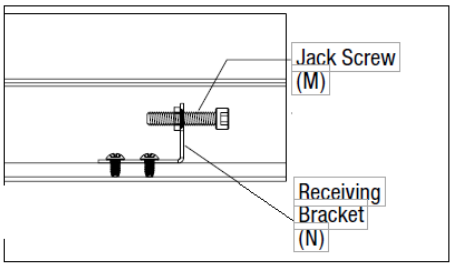

Figure 5

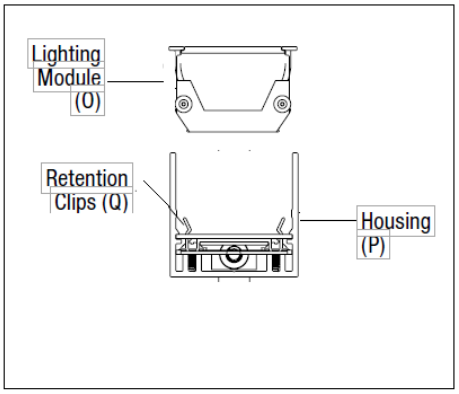

Figure 6

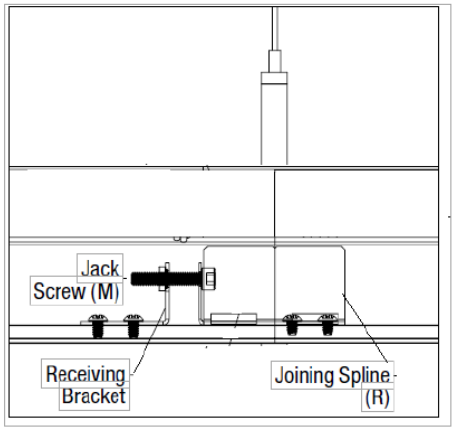

Wiring (Refer to Fig. 7)

NOTE: Power to the remote driver and wiring between remote driver and fixture must be installed according to local electrical codes.

Remote drivers are programmed to match each fixture and labeled accordingly. Ensure low voltage cables are connected to their corresponding remote drivers.

To access the mounting holes and wiring compartment, remove the Snap Cover (T) from the remote driver box with a small screwdriver.

Insert mounting screws (by others) through pre-drilled holes and fasten driver box to appropriate structure.

If removable low voltage cable is provided, plug the connector into mating connector at end of SJ Cord. Route low voltage cable from junction box to remote driver box.

Loosen the screw at one end of the driver box and remove the Low Voltage Cover (U). Insert the low voltage cable from the fixture into the box. Replace the cover with the wire in the slot and the knot inside the box. Next, tighten the screw and plug the mating connectors together.

If fixture was ordered with optional whip, snap driver box cover back into place and make power and dimming connections at the junction box where the whip is terminated. Otherwise, remove knockout at the other end of the box and attached conduit to driver box using standard connectors (by others).

Make power and dimming connections according to chart below.

Figure 7

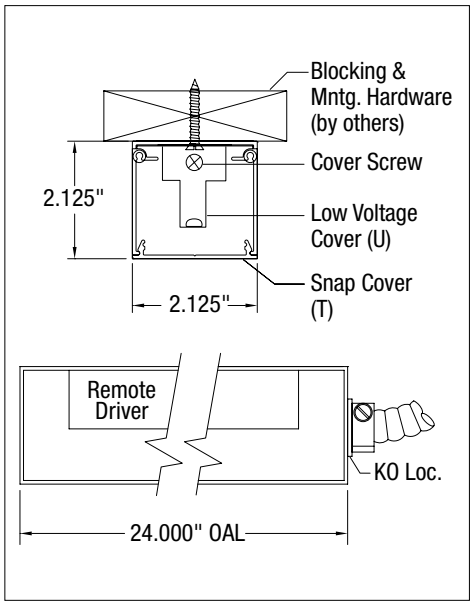

Wiring Chart Codes

Function	Standard 0-10V Dimming
Switched Line (120-277V)	Black
Neutral	White
Ground	Green
0-10V (+)	Purple
0-10V (-)	Grey

Finish

At each Junction Box raise Canopy Cover (Fig. 2 – F) to Junction Box and fasten with Canopy Cover Nut (Fig. 2 – C). If there is an SJ Cord, tuck or pull out excess cord from the canopy leaving a little slack.

Note: The SJ Cord should be neither tight nor excessively loose. The cord(s) should not tilt or suspend the fixture.

Service and Repair

DO NOT attempt to repair fixtures without first contacting the factory. Improper repair actions will void the warranty and may result in damage to the fixture components. Driver and LED components are custom configured at the factory. Generic replacements CANNOT be used. If any parts need replacing, obtain from the factory; properly configured for each fixture.

If directed to make a repair, TURN OFF POWER to the fixture before disassembly.

CAUTION: Some fixtures have multiple circuits running through the wiring compartment including un-switched circuits. BE SURE ALL POWER IS OFF BEFORE SERVICING.

(Refer to Fig. 8)
To remove the lighting module, insert a small screwdriver in Notch (V) and turn until module releases from retention clip. Pull module free from other retention clips.

To completely remove lighting module, disconnect Bullet Connectors (W) then separate the Safety Chain at the Links (X).

Figure 8

